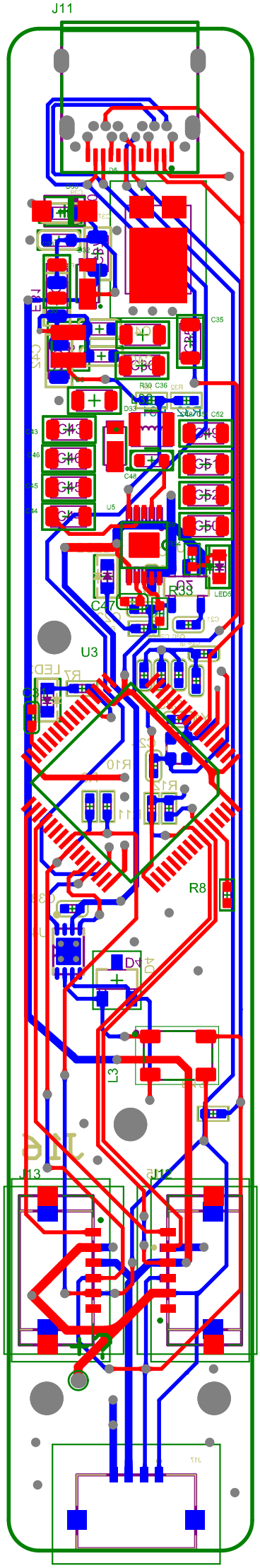
J11
U3
R33
C47
R8
L3
J13